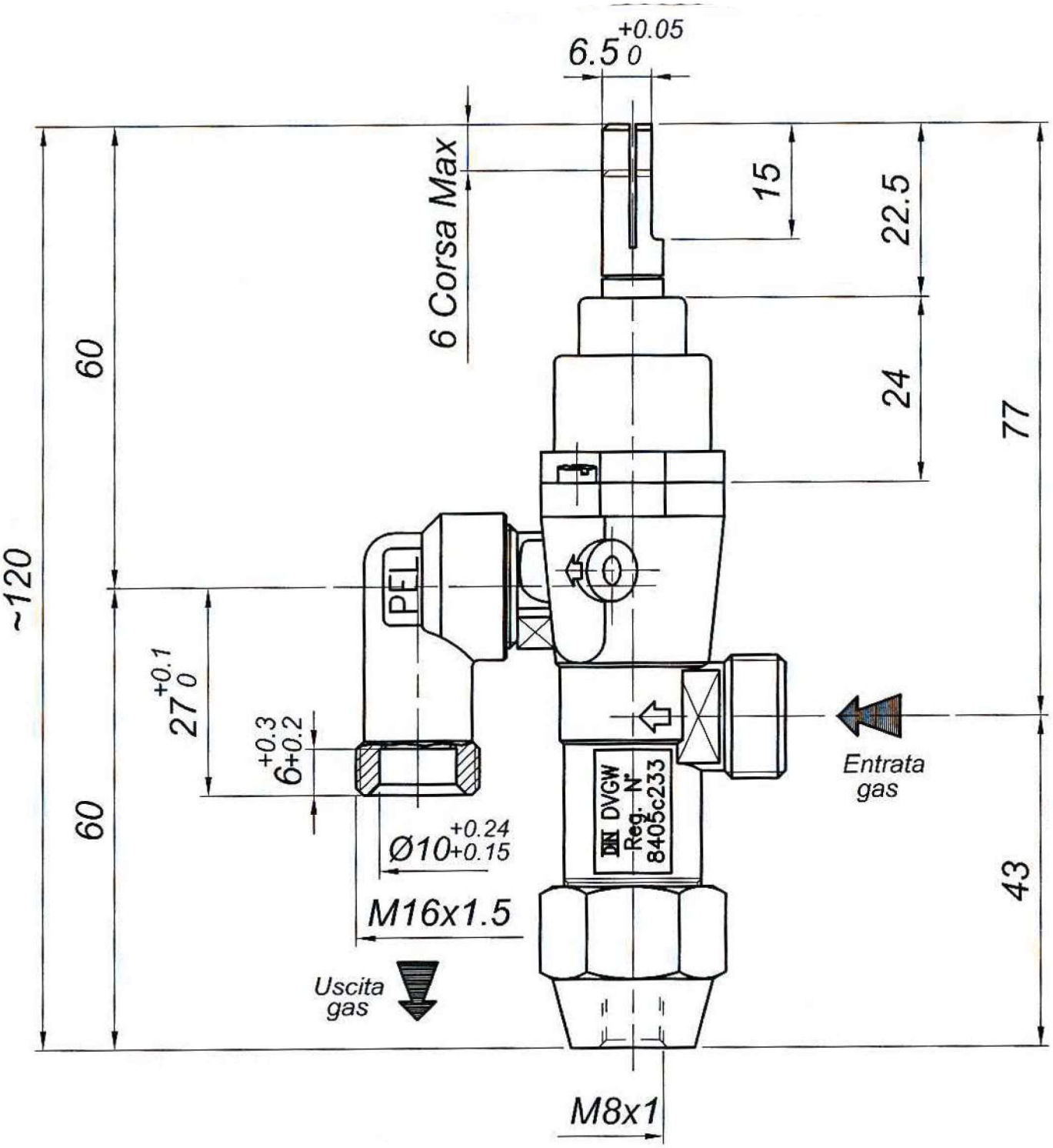
6.5 +0.05 0
6 Corsa Max
15
22.5
24
77
60
~120
60
43
PEL
27 +0.1 0
6 +0.3 +0.2
Ø10 +0.24 +0.15
M16x1.5
M8x1
DIN DVGW Reg. N° 8405c233
Entrata gas
Uscita gas

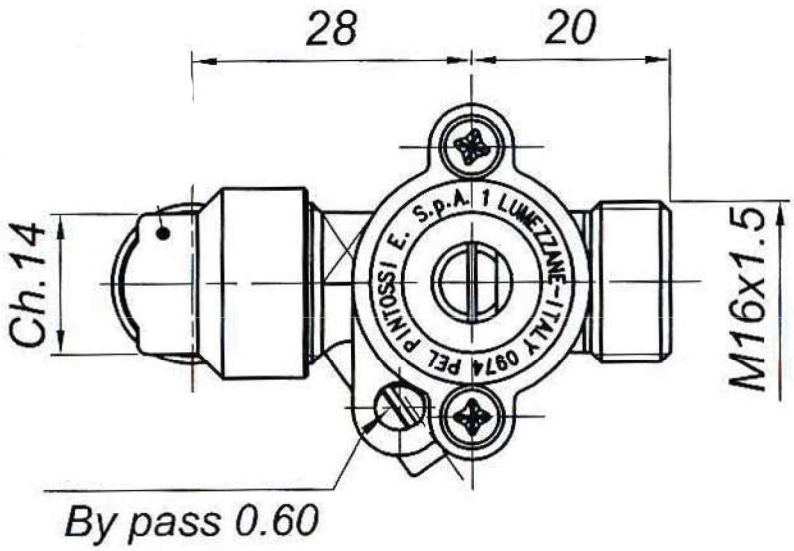
28
20
Ch.14
M16x1.5
PEL PINTOSSI E. S.p.A. I LUMEZZANE-ITALY 0974
By pass 0.60